PDR-4.2 Instructions/Instructions/Anleitung/Instrucciones

PARK TOOL CO. 5115 Hadley Ave. N., St. Paul, MN 55128 (USA) www.parktool.com

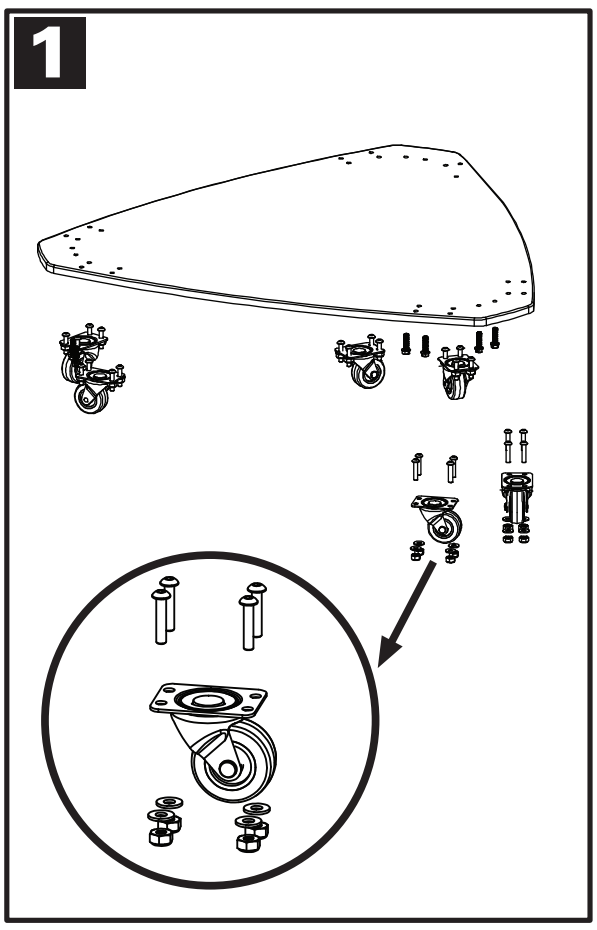

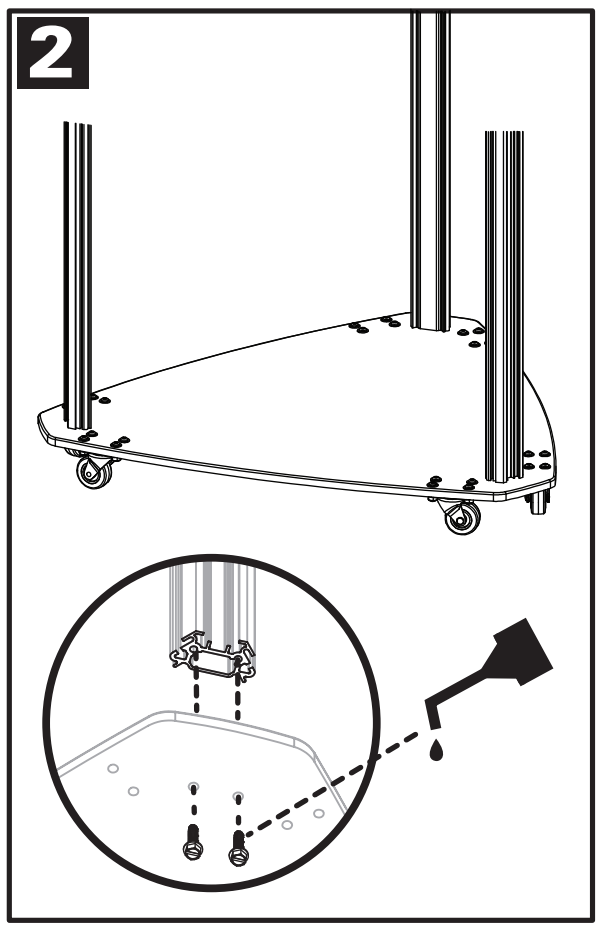

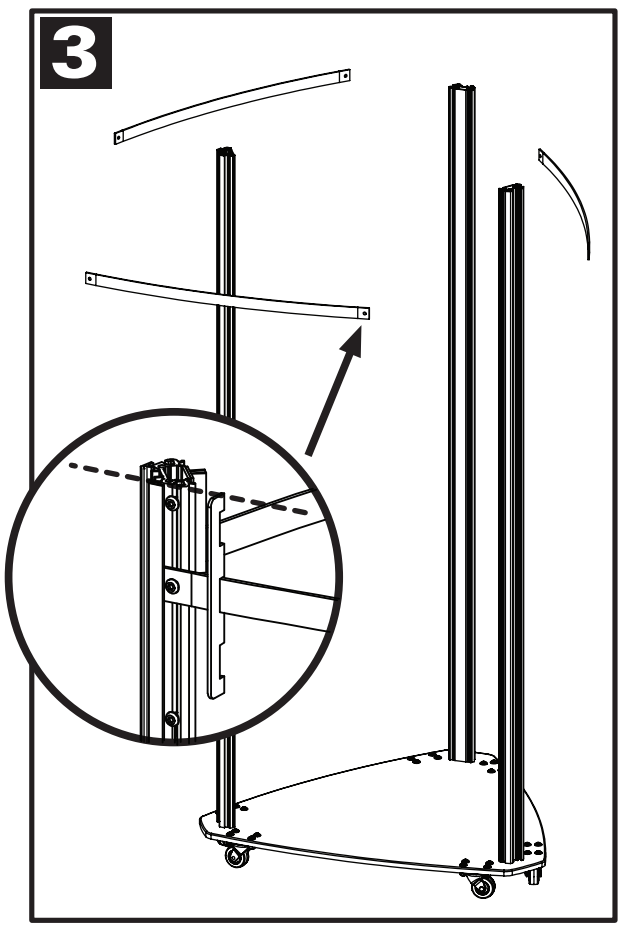

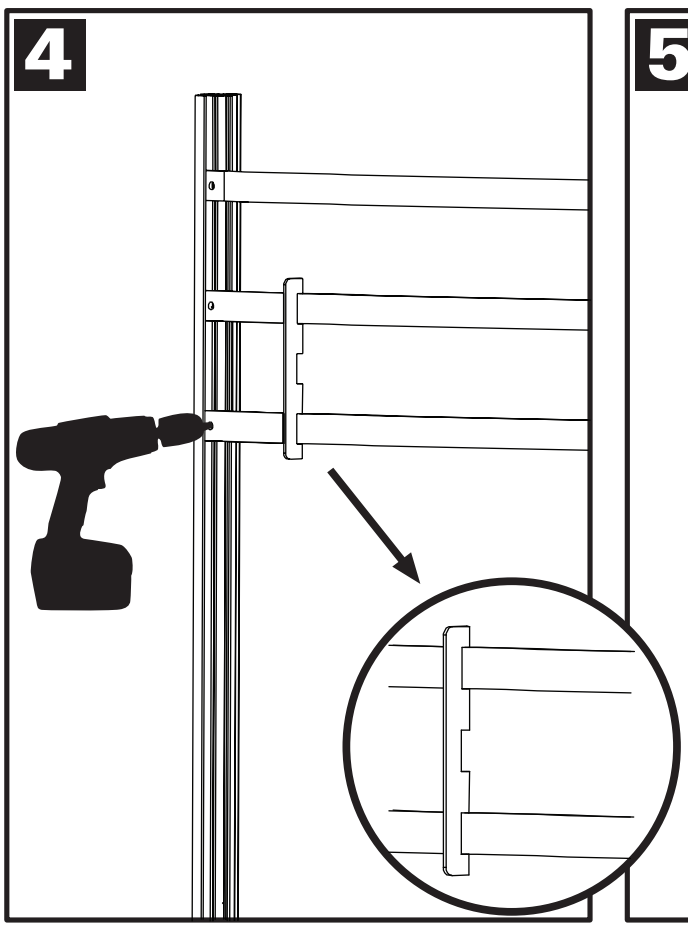

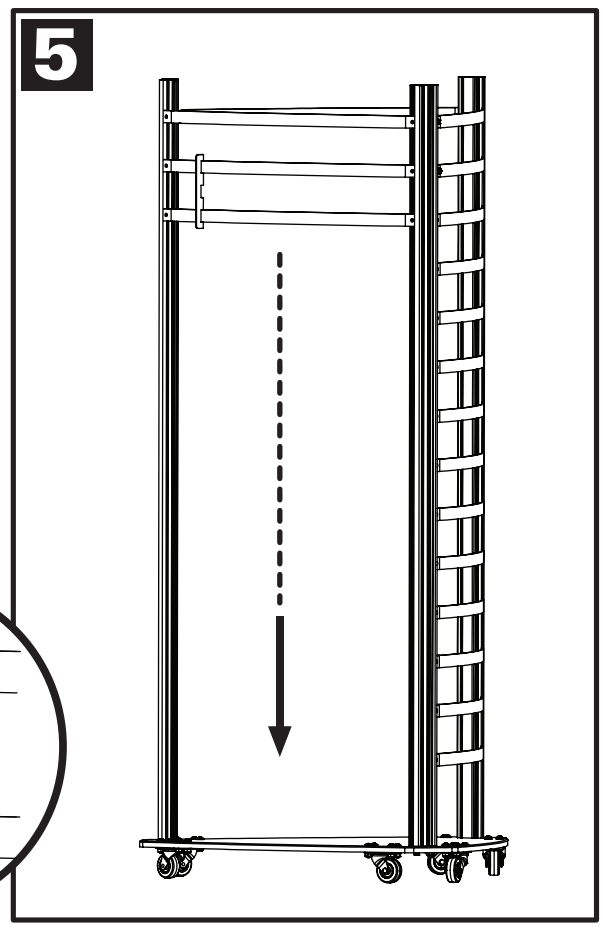

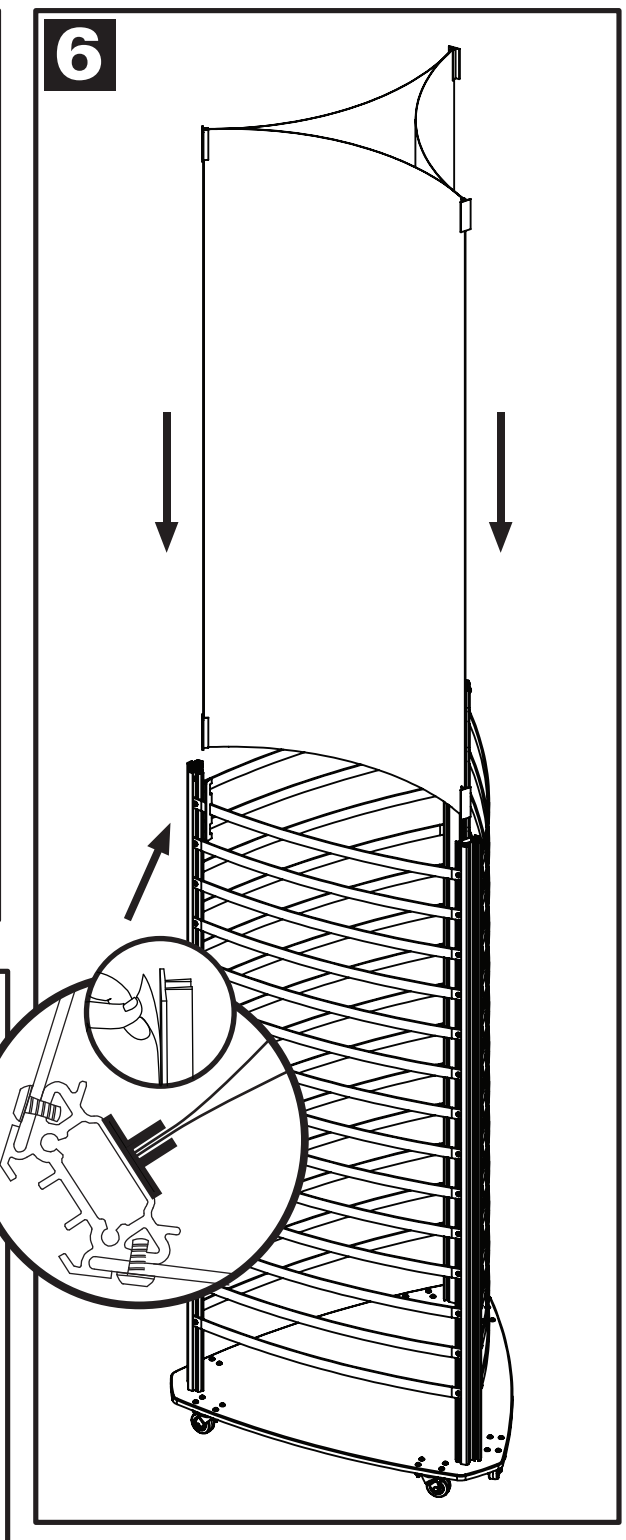

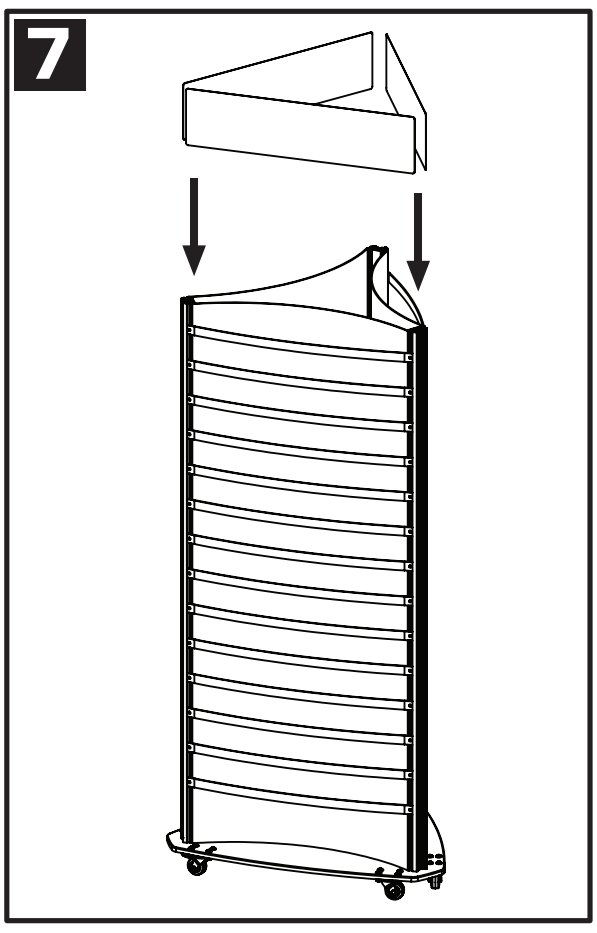

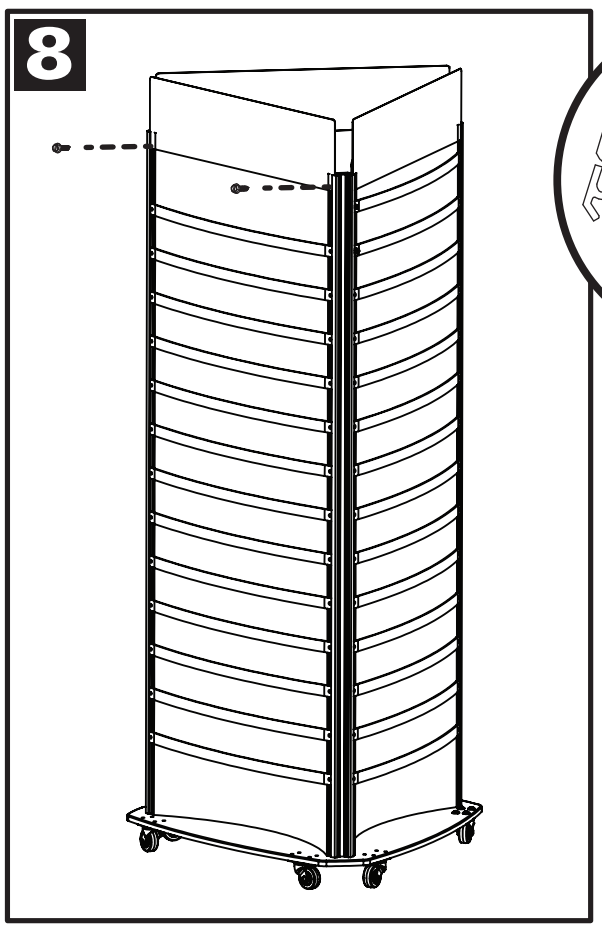

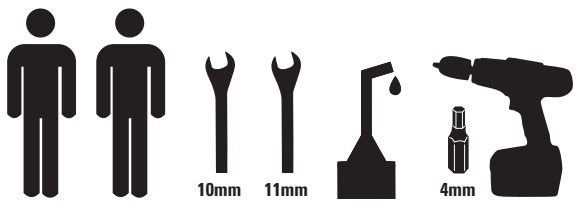

©2017 ParkTool Co.
PARKTOOL® and the color BLUE are registered trademarks of ParkTool Co.