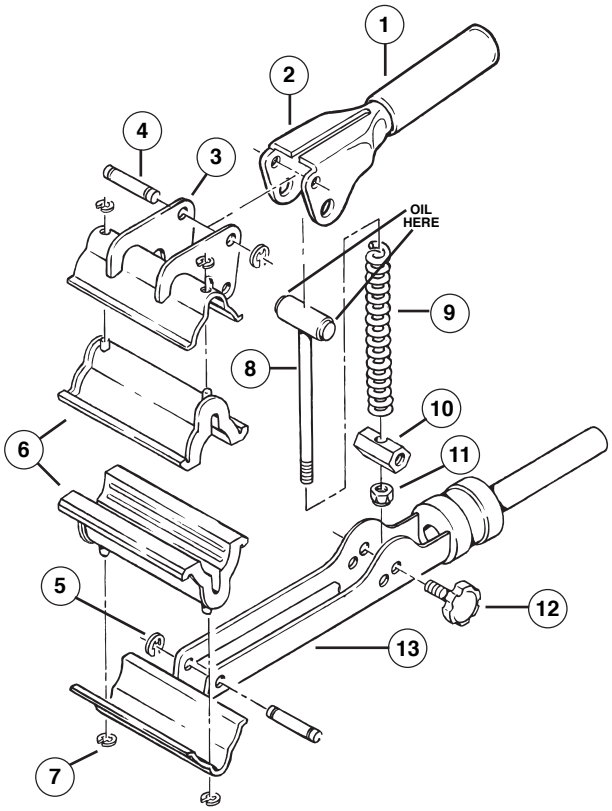

100-2C Clamp

Ref. No.	Part No.	Description	Qty.
1	138-2	Handle grip	1
2	103-2	Clamp handle	1
3	101-2	Movable jaw	1
4	107-CS	Clevis pin	2
5	107-2	Circlip	2
6	468G	Jaw cover set (includes circlips)	1
7	467-1	Circlip	4
8	110B	Linkage	1
9	111A-6	Spring	1
10	112A-CS-R	Linkage pivot	1
11	113A	Thin nylon lock nut 5/16 - 18	1
12	112B-R	Linkage pivot knob	2
13	102-2	Rotating shaft and jaw	1